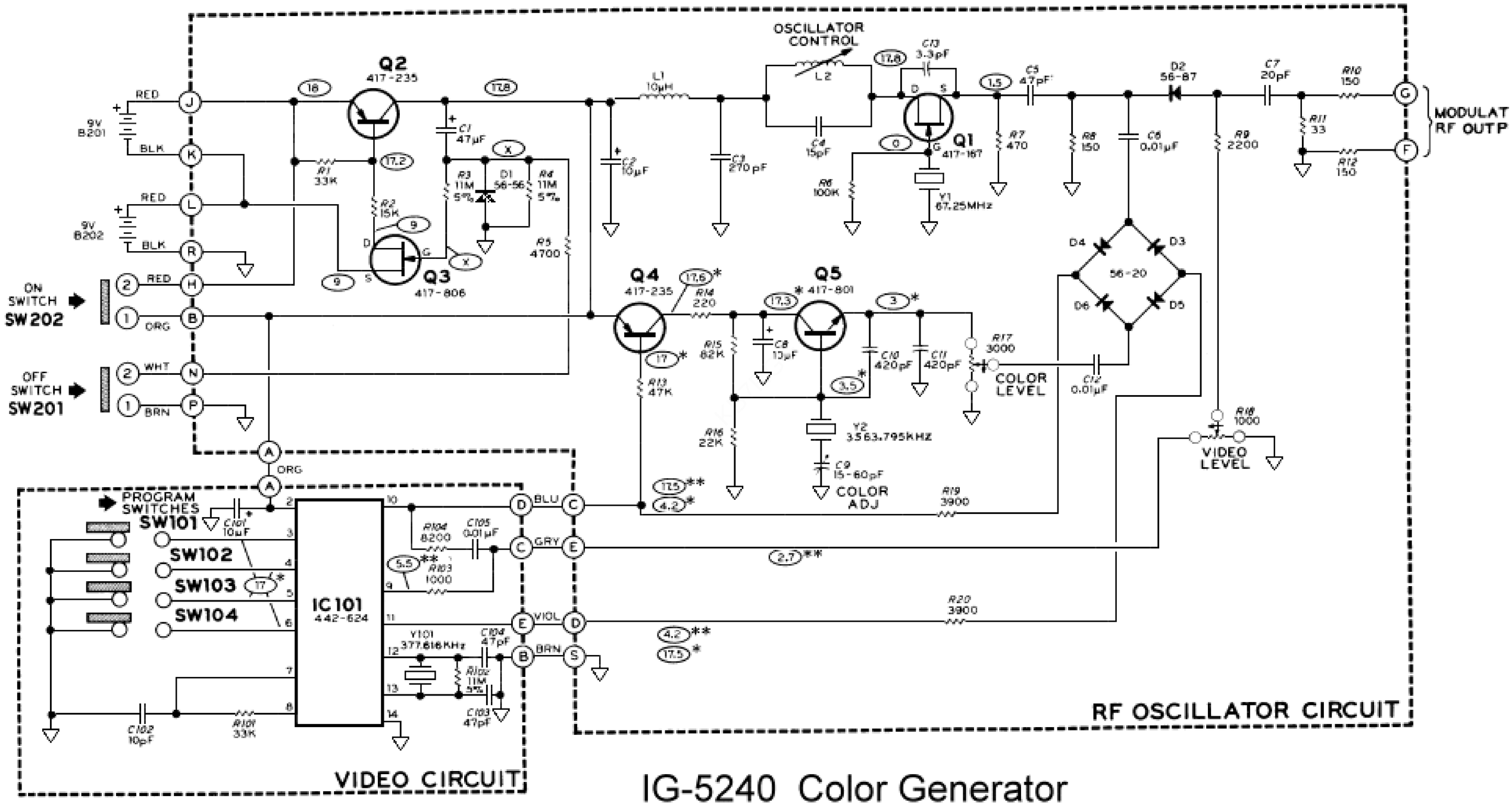

IG-5240 Color Generator