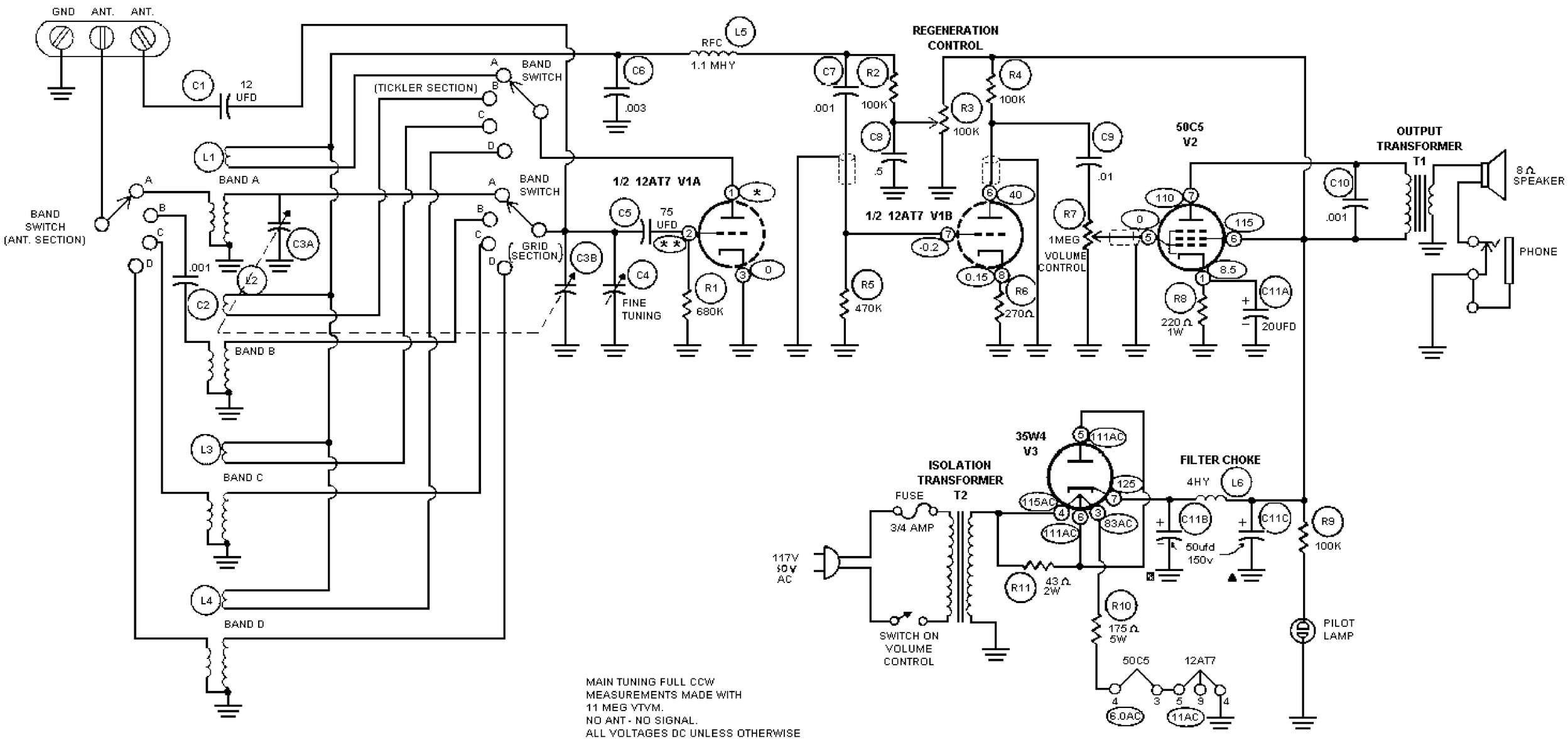

MAIN TUNING FULL CCW
MEASUREMENTS MADE WITH
11 MEG VTVM.
NO ANT - NO SIGNAL.
ALL VOLTAGES DC UNLESS OTHERWISE
INDICATED AND POSITIVE WITH RESPECT
TO CHASSIS.
*0 - 40 VOLTS DEPENDING UPON SETTING
OF REGENERATION COLTROL
* * -0.5 VOLTS WITH REGENERATION CONTROL
FULL CCW TO SEVERAL VOLTS NEGATIVE
WITH CONTROL FULL Y CW.

SCHEMATIC OF THE HEATHKIT SHORT WAVE LISTENERS RADIO MODEL GR-81