Use #8AWG or larger wire for connections to battery.

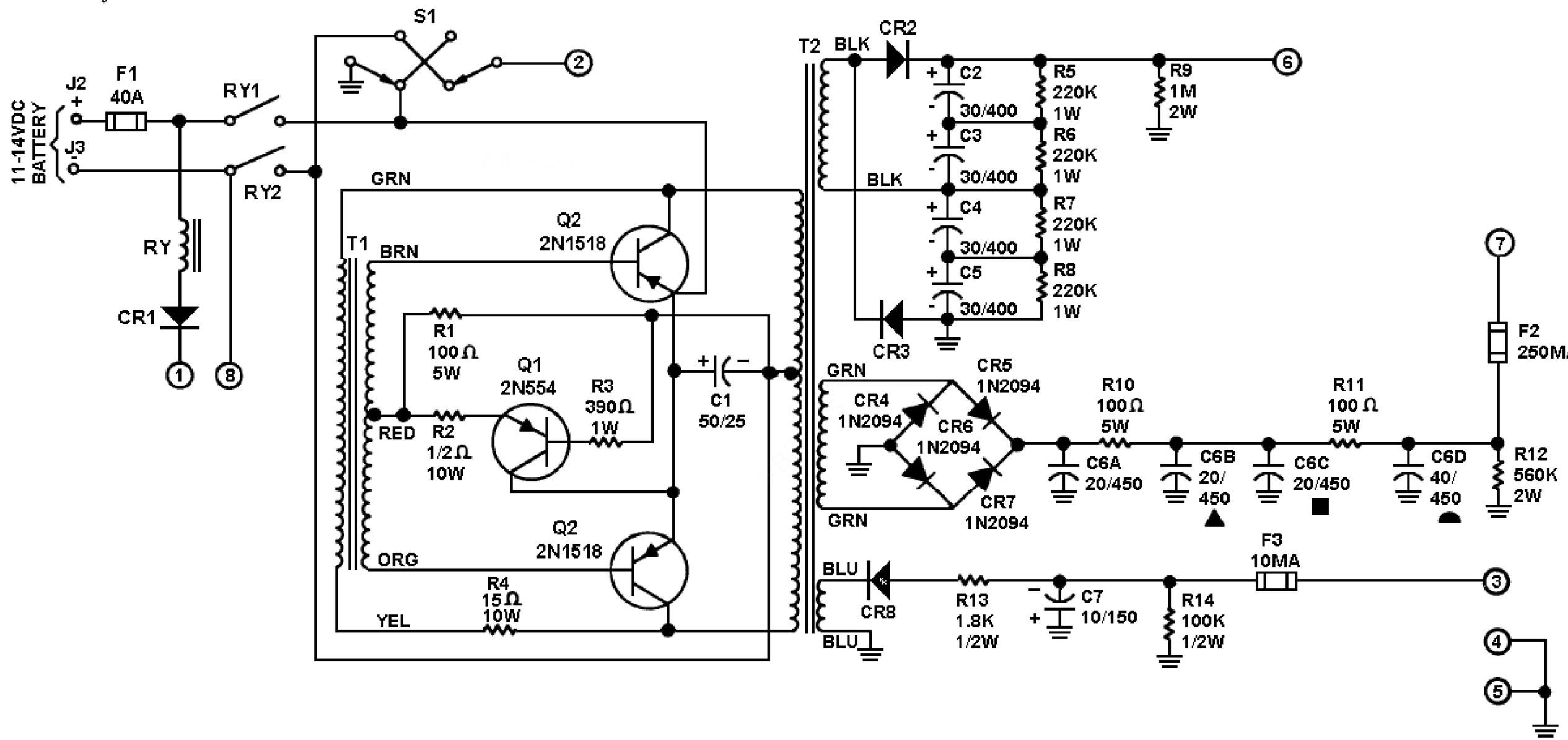

Circled numbers ① through ⑧ are pin numbers on the 8-pin female socket J1 on the panel. Each is to be connected with #18AWG wire to the same-numbered pin on the male 8-pin socket at the rear of the EICO 753 Transceiver (or other EICO transceiver for which this supply shall be specified).

EICO 752 — SCHEMATIC DIAGRAM