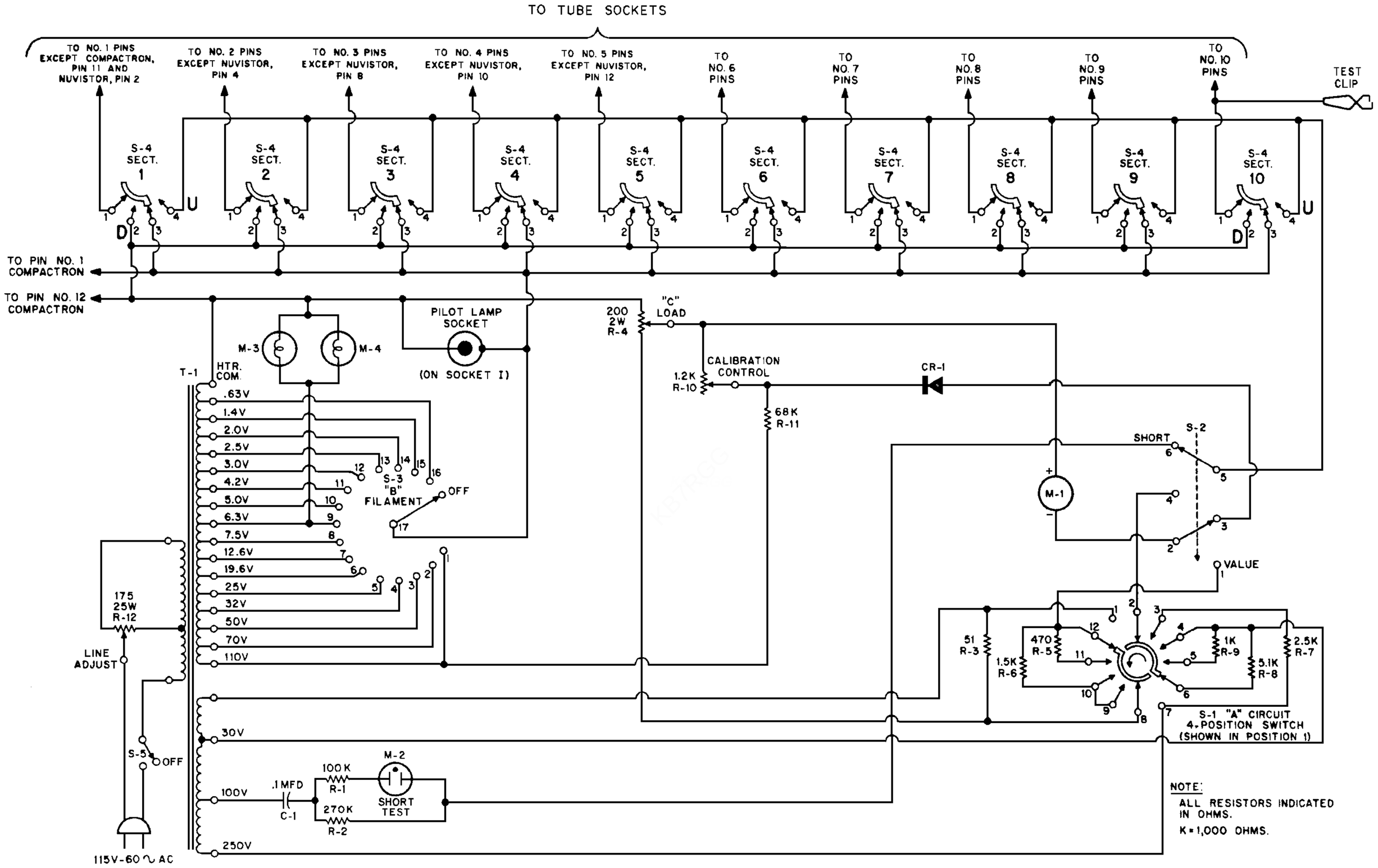

Knight K600 Tube Tester