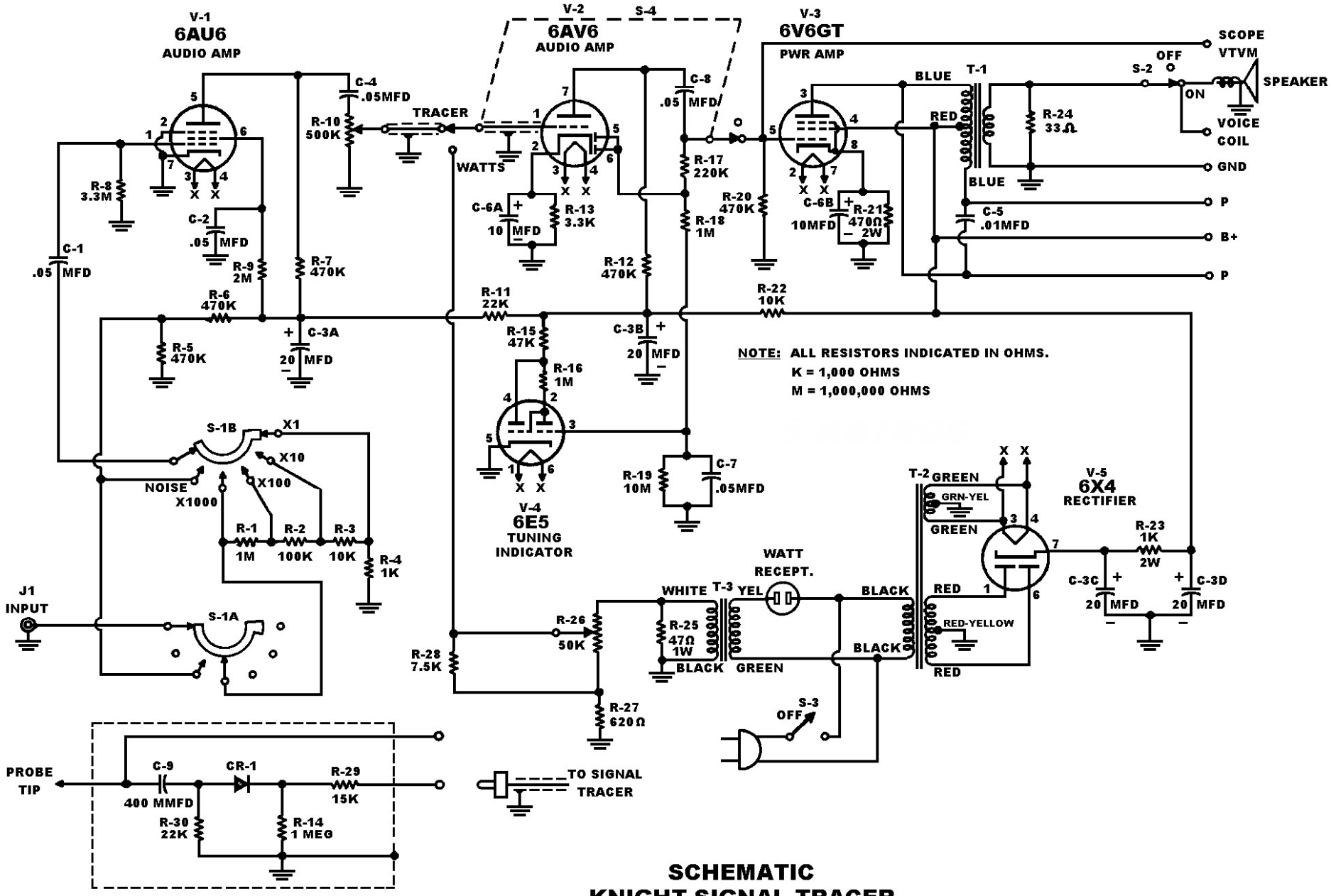

SCHEMATIC
KNIGHT SIGNAL TRACER
MODEL 83Y135