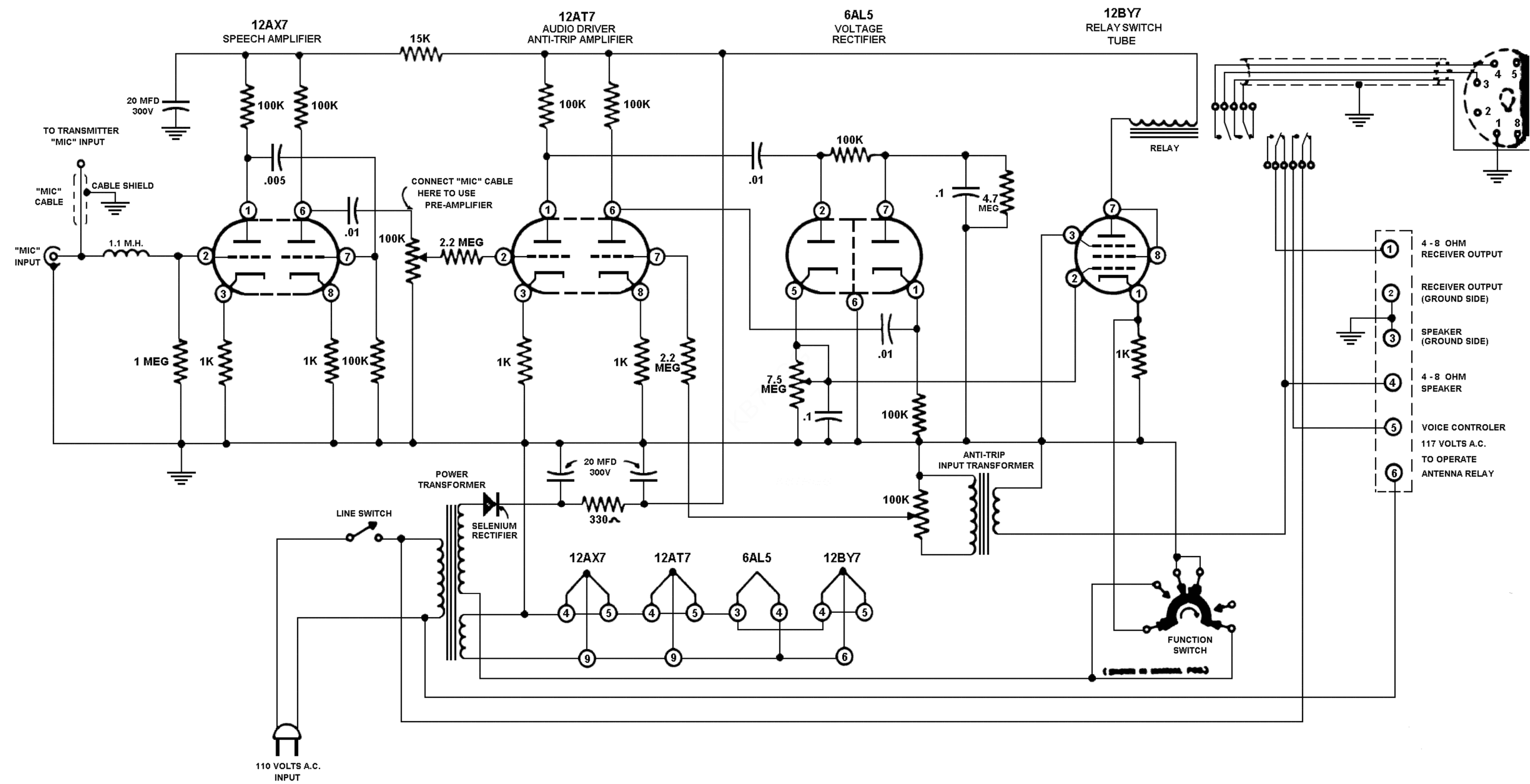
12AX7
SPEECH AMPLIFIER
15K
12AT7
AUDIO DRIVER
ANTI-TRIP AMPLIFIER
6AL5
VOLTAGE
RECTIFIER
12BY7
RELAY SWITCH
TUBE
20 MFD
300V
100K
100K
100K
100K
TO TRANSMITTER
"MIC" INPUT
"MIC"
CABLE
CABLE SHIELD
.005
.01
CONNECT "MIC" CABLE
HERE TO USE
PRE-AMPLIFIER
.01
100K
.1
4.7
MEG
RELAY
"MIC"
INPUT
1.1 M.H.
100K
2.2 MEG
1 MEG
1K
1K
100K
1K
1K
2.2
MEG
.01
1K
7.5
MEG
.1
100K
4 - 8 OHM
RECEIVER OUTPUT
RECEIVER OUTPUT
(GROUND SIDE)
SPEAKER
(GROUND SIDE)
4 - 8 OHM
SPEAKER
VOICE CONTROLER
117 VOLTS A.C.
TO OPERATE
ANTENNA RELAY
20 MFD
300V
ANTI-TRIP
INPUT TRANSFORMER
POWER
TRANSFORMER
100K
330
LINE SWITCH
SELENIUM
RECTIFIER
12AX7
12AT7
6AL5
12BY7
FUNCTION
SWITCH
110 VOLTS A.C.
INPUT