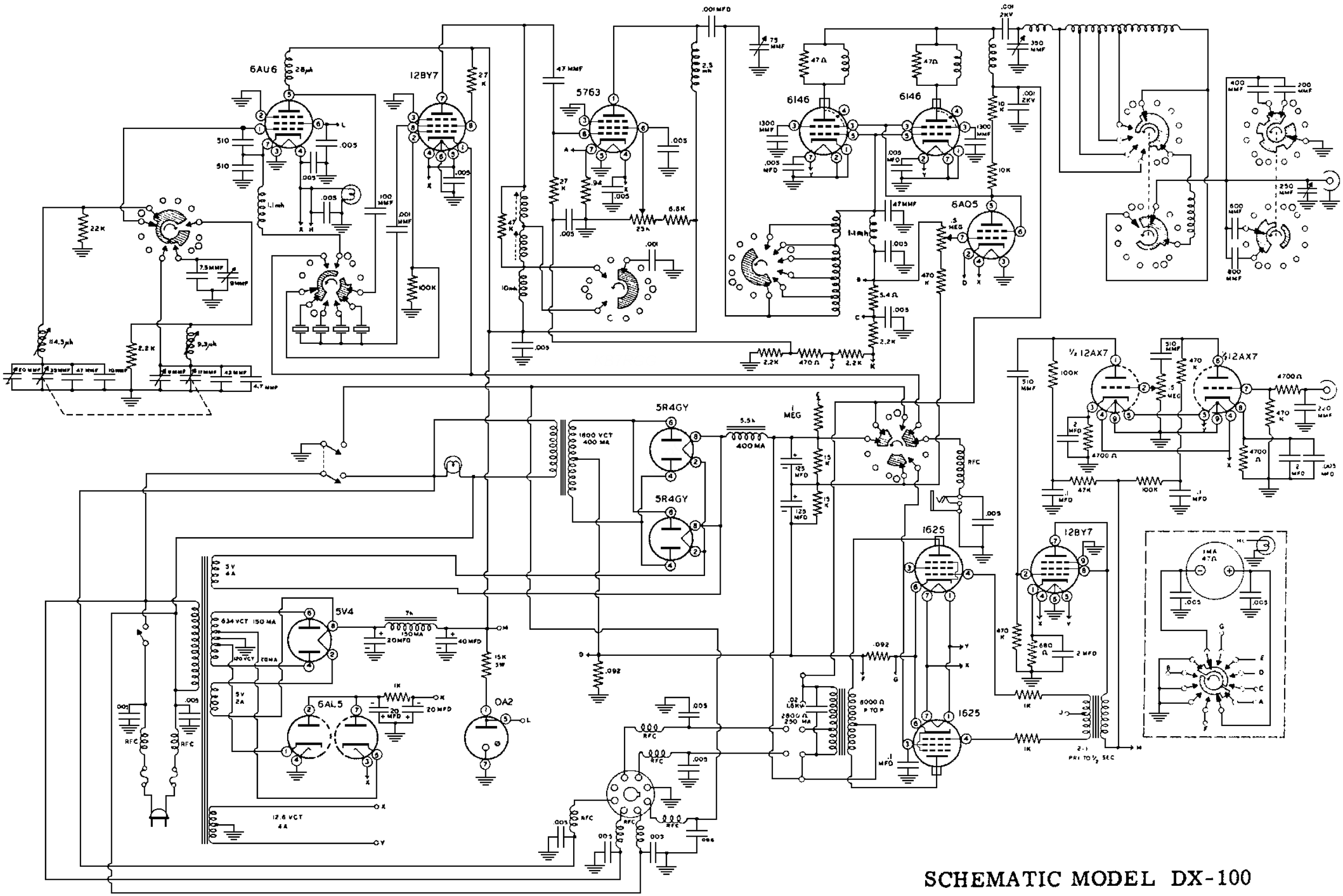

SCHEMATIC MODEL DX-100