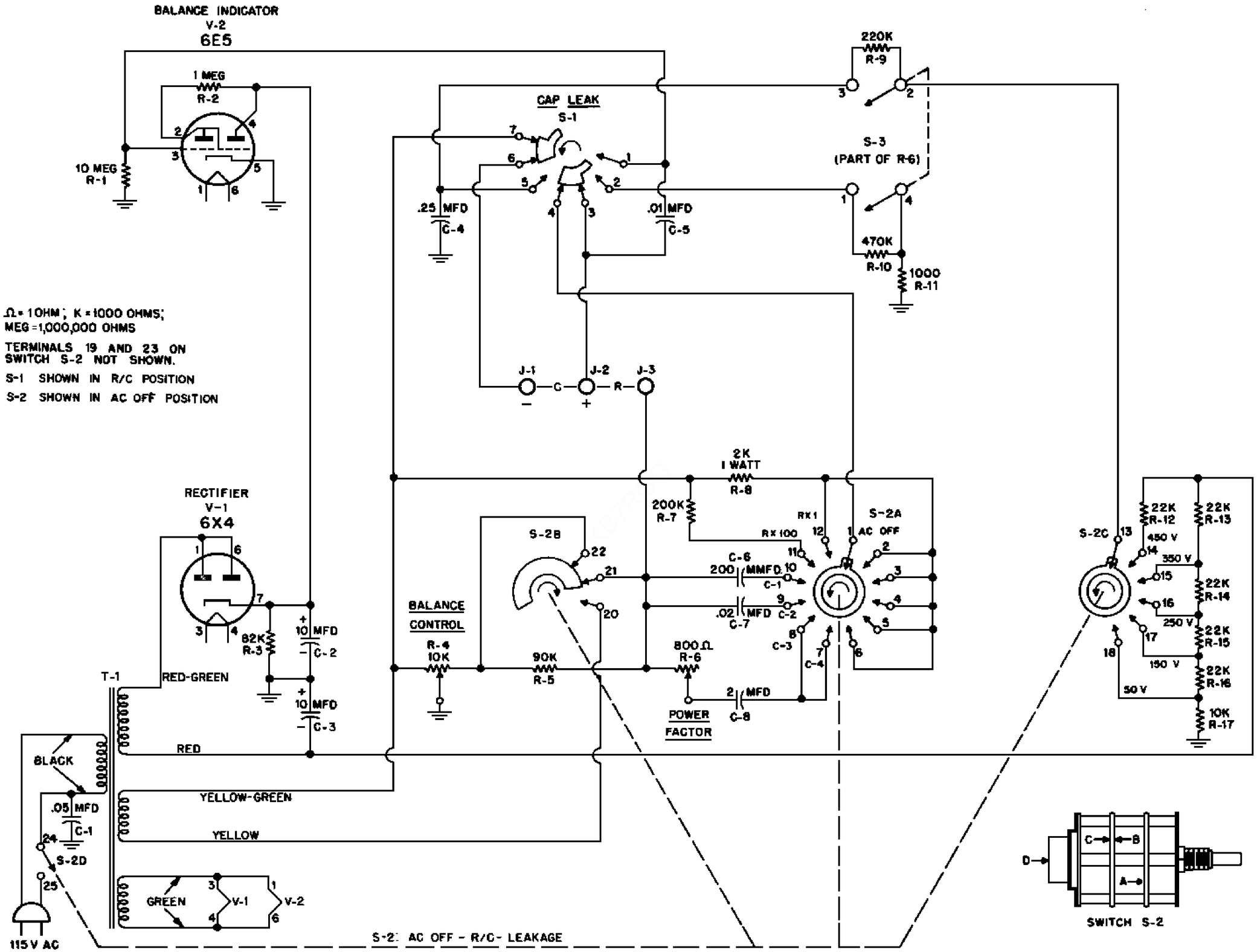

Resistor-Capacitor Tester